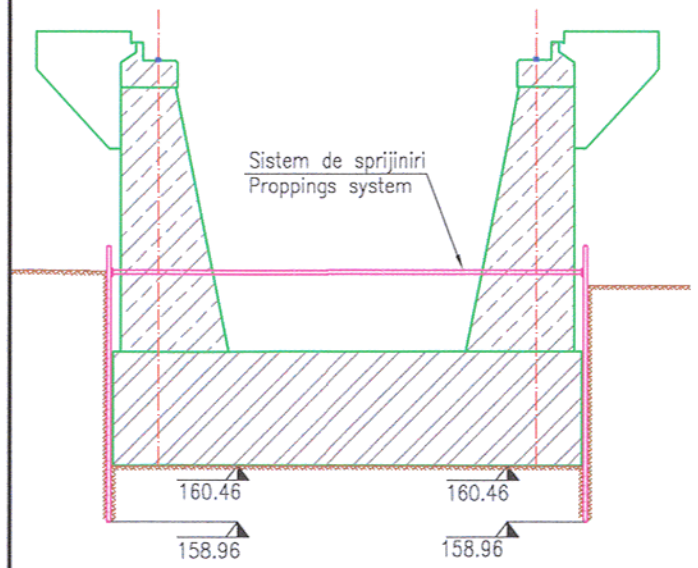

ETAPA I:
- Se amenajeaza platforma tehnologica si organizarea de santier;
- Se executa sapatura cu sprijiniri pentru realizarea fundatiilor noi
- Se betoneaza fundatiile si se scot sprijinirile.
- Pe suprafetele din beton in contact cu pamantul se vor aplica 2 straturi de emulsie din bitum filerizat.

STAGE I:
- Arranging the technological platform and the site organization.
- Executing propped-up excavation for execution of new foundations.
- Concreting the foundations and removing the prop-ups.
- 2 layers of fillered bitumen emulsion will be applied on the concrete areas that are in contact with the soil.

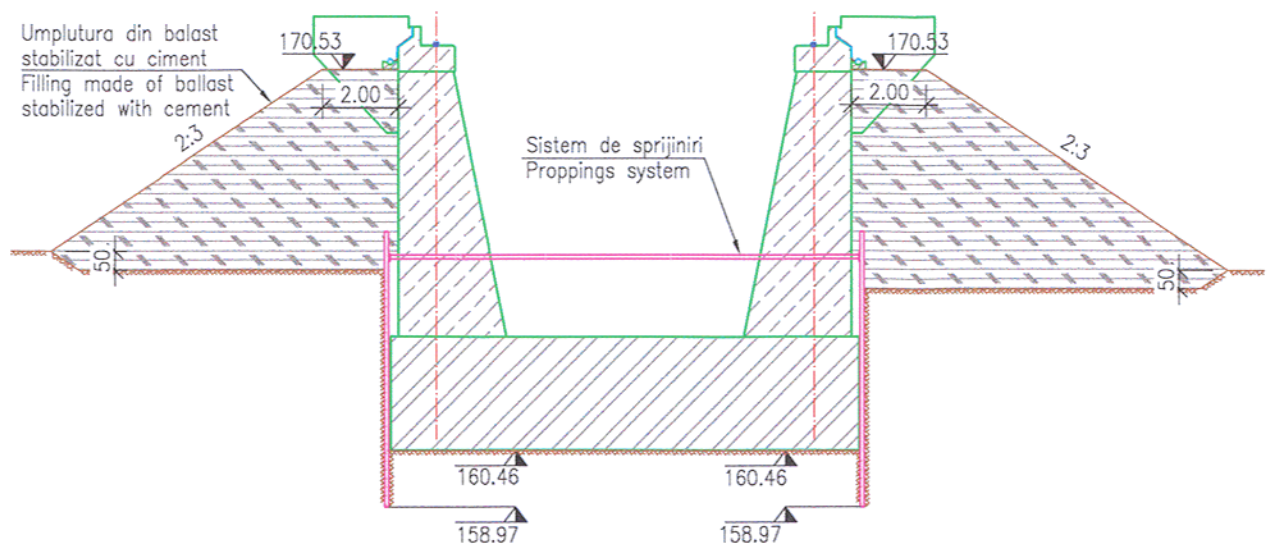

ETAPA II:
- Se executa sapatura sub nivelul terenului natural pentru inlaturarea stratului vegetal, cu jumatate de metru;
- Se executa umplutura din balast stabilizat cu ciment la cota;
- Se executa hidroizolatia si sapa de protectie;
- Se executa fundatia drenului conform detaliilor din proiect;
- Se executa sistemul drenant (geodren, geotextil si tub);

STAGE II:
- Executing the excavation below the natural ground level, for removing the vegetal soil layer, about half of a meter;
- Executing the ballast filling stabilized with cement at level;
- Executing the waterproofing and protection blanket;
- Executing the drain foundation according to the design details;
- Executing the draining system (geo-drain, geo-textile and tube);

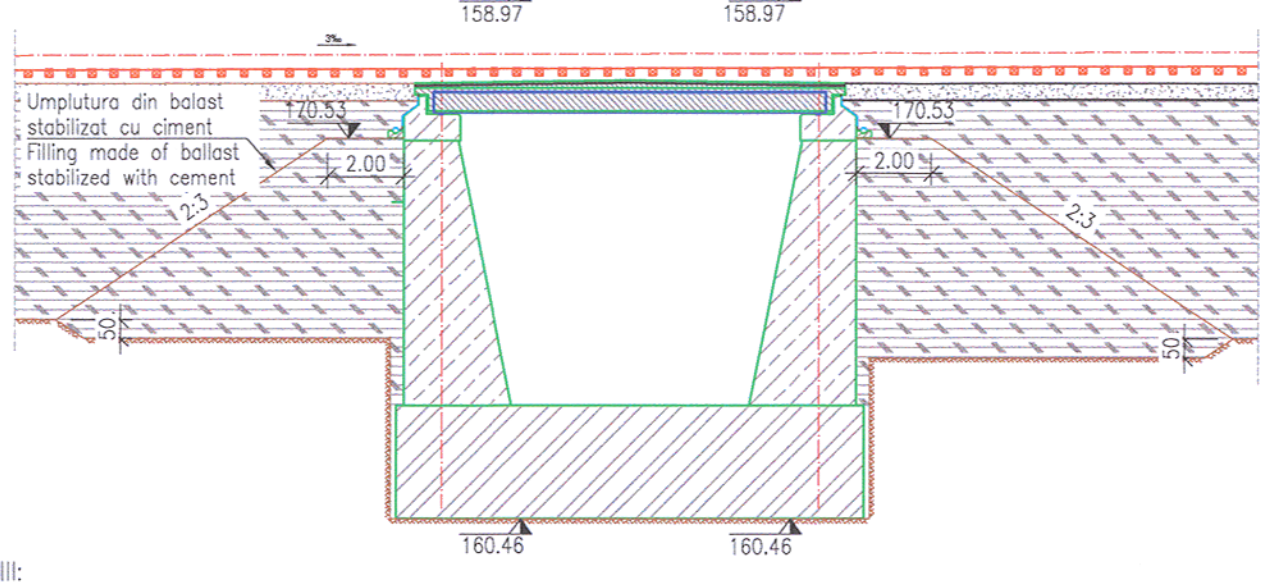

ETAPA III:
- Se executa terasamentul la cota finala proiectata.
- Se executa tablierul.
- Se executa calea conform proiectului de suprastructura CF.
- Se deschide circulatia in trepte de viteza conform instructiilor CFR.

STAGE III:
- Executing the embankment at the final designed level.
- Executing the deck.
- Executing the track according to the railway superstructure design.
- Opening the traffic with speed limits according to the CFR instructions.

ETAPA IV:
- Se executa lucrarile de protectie a albiei si racordarea acestora la albia existenta;
- Se dezafecteaza platforma tehnologica si organizarea de santier;

STAGE IV:
- Executing riverbed protection works and their connection to the existing riverbed;
- Closing down the technological platform and the site organization;

RĂCÂNEL I. IONUT RADU * ROMÂNIA MLPAT Nr. 07230 A4, B2, D INGINER VERIFICATOR PROIECTE *

Prezentul plan anuleaza si inlocuieste versiunea anterioara
This plan cancels and replaces previous version

CHIRICA C. ANTON ROMANIA MLPAT 1593 INGINER VERIFICATOR PROIECTE

Verificator / Expert Checker / Expert	Cerinta Requirement	Semnatura Signature	Referat / Expertiza Report / Expertise

European Investment Bank

MINISTERUL TRANSPORTURILOR

BENEFICIAR / BENEFICIARY :

CFR

COMPANIA NAȚIONALĂ DE CĂI FERATE "CFR" SA

PROIECTANT / DESIGNER: PÖYRY

			Data Date	Semnatura Signature
Aprobat Approved	Sef de echipa Team leader	C. Teodorescu	01.2013	
Verificat Checked	Expert Cheie Key Expert	R. Tudorascu	01.2013	
Subcontractant / Subcontractor	VIOTOP			
Aprobat Approved	Adjunct Sef de echipa Deputy Team leader	A.M. Baicu	01.2013	
Proiectat Designed	Inginer Engineer	A. Popa	01.2013	

"Reabilitarea liniei c.f. Frontier ă - Curtici - Simeria, parte componentă a coridorului IV Pan - European pentru circula ția trenurilor cu viteză maximă de 160 km/h"
Tronsonul 2-C : cap Y Ilteu - cap Y Gurasada
"Rehabilitation of the Railway Line Border - Curtici - Simeria, component Part of the IV Pan - European Corridor for the Trains Circulation with maximum speed of 160 km/h"
Section 2-C : end Y Ilteu - end Y Gurasada

Project 9i 35311.1

Faza / Phase: PTH+CS / TD+TS

Denumire desen / Drawing name:

TEHNOLOGIE DE EXECUTIE/ EXECUTION PHASES
POD / BrRIDGE KM pr. 523+121

Scara / Scale	Revizia / Revision	Cod desen / Drawing Code	Nr / No
1:200	1 / 04.2013	PT.02.02.17.PO.10.04	04